TOC

01 ----- PMOD, BTN, SWTNs
02 ----- Leds
03 ----- ChipKIT IO
04 ----- FPGA BANKS
05 ----- CONFIG SPI FLASH
06 ----- FPGA POWER
07 ----- ETHERNET
08 ----- DDR3
09 ----- USB PROG/UART
10 ----- POWER REGULATION
11 ----- POWER REGULATION V2
12 ----- LCD + 7 SEGMENTS

Title	TOC	
Size A	Document Number Arty A7	Rev 1
Date: Tuesday, April 21, 2026	Sheet 1 of 14	

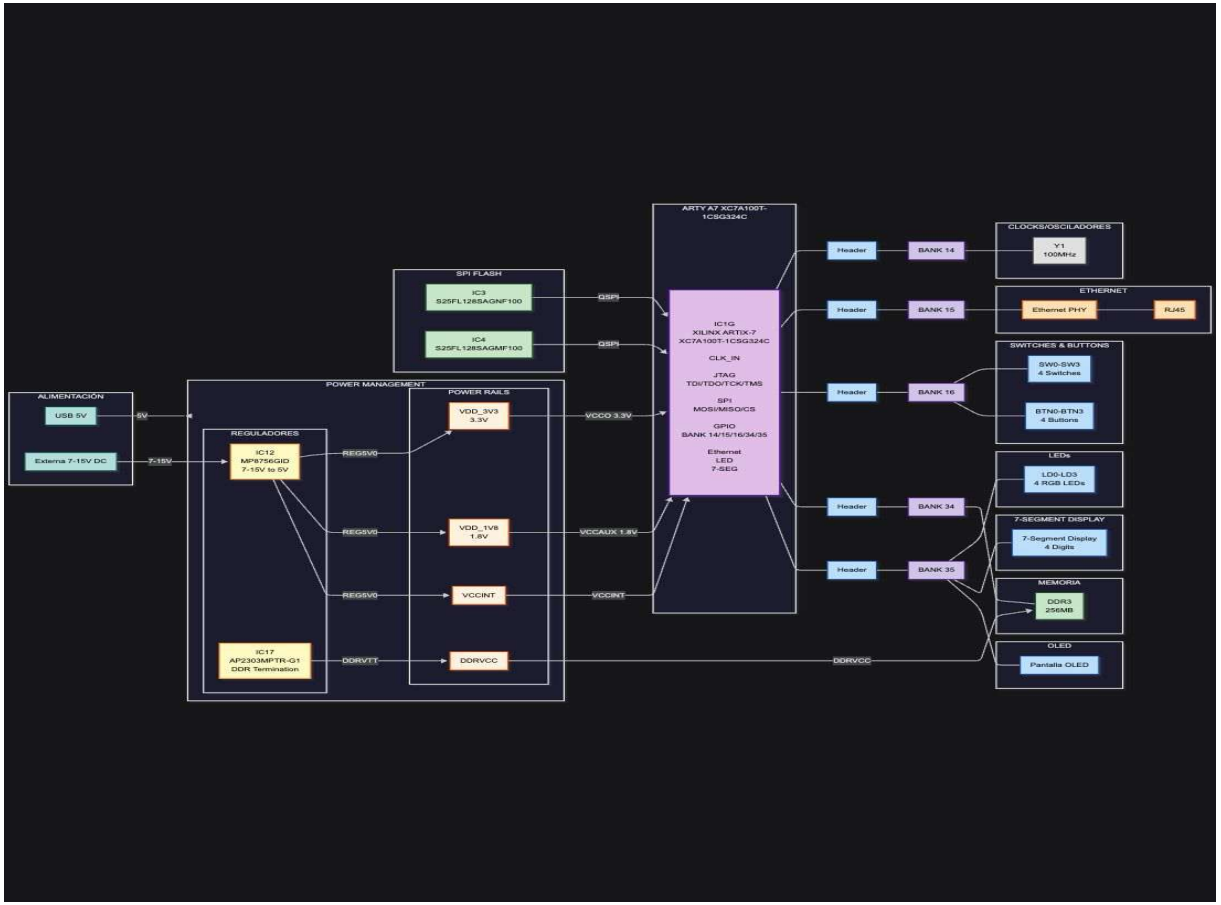

Title	BLOCK DIAGRAM	
Size A	Document Number Arty A7	Rev 1
Date: Tuesday, April 21, 2026	Sheet 2 of 14	

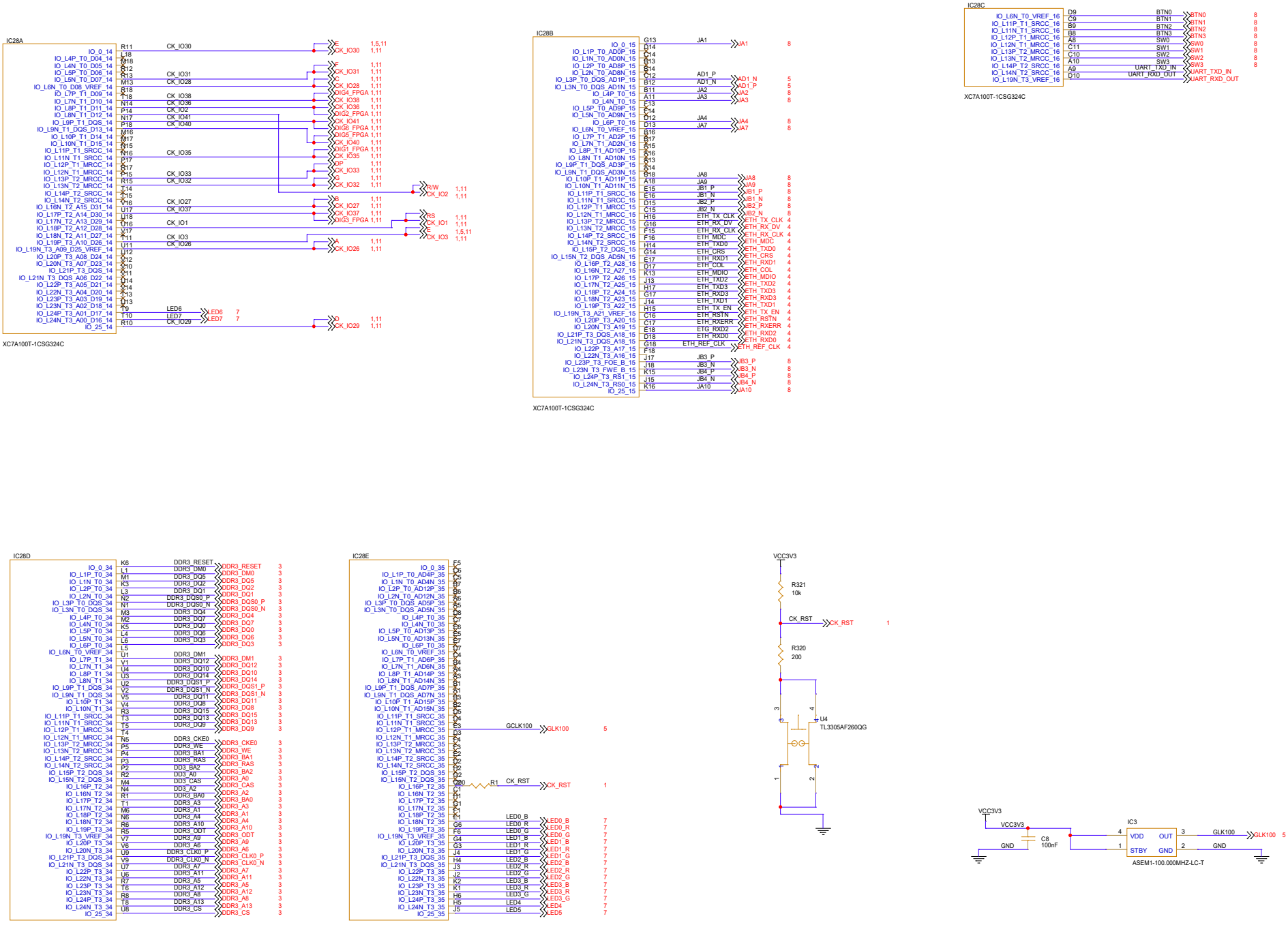

Title	FPGA BANKS
Size C	Document Number Arty A7
Rev	1
Date:	Sunday, May 03, 2026
Sheet	3 of 14

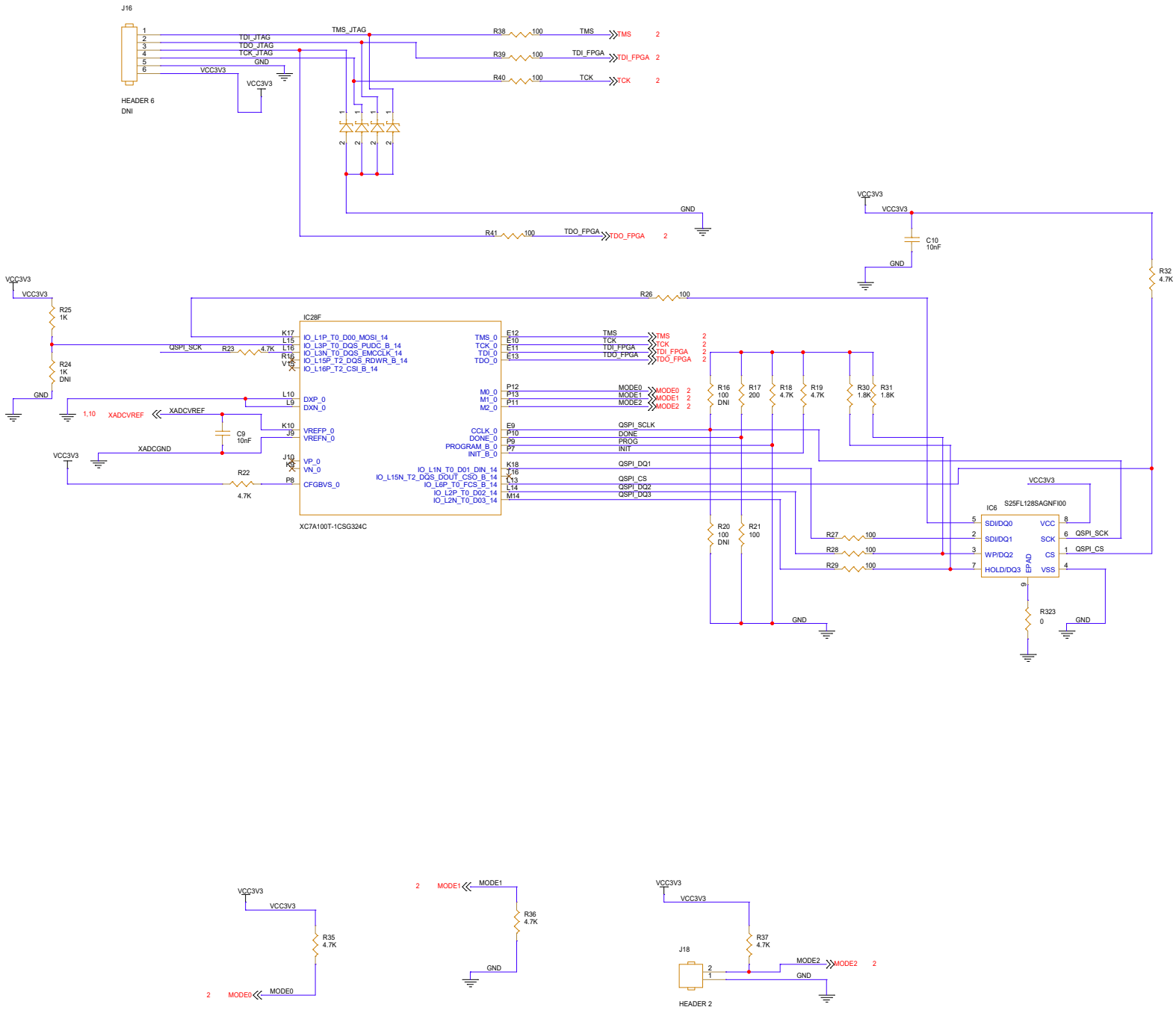

Title	CONFIG SPI FLASH		
Size C	Document Number Arty A7		Rev 1
Date: Saturday, May 02, 2026		Sheet 4 of 14	

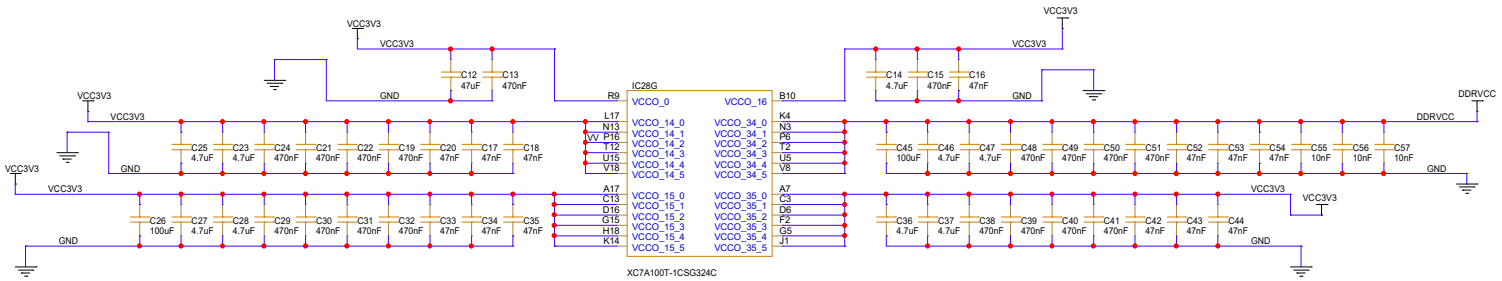

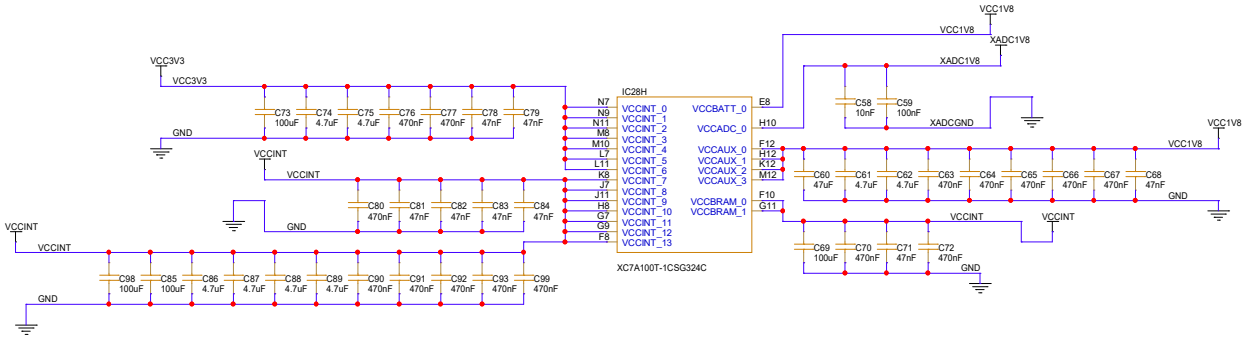

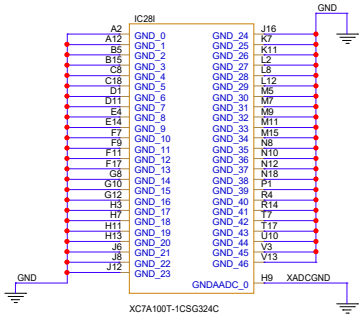

Title	FPGA POWER		
Size C	Document Number Arty A7		Rev 1
Date: Saturday, May 02, 2026		Sheet 5 of 14	

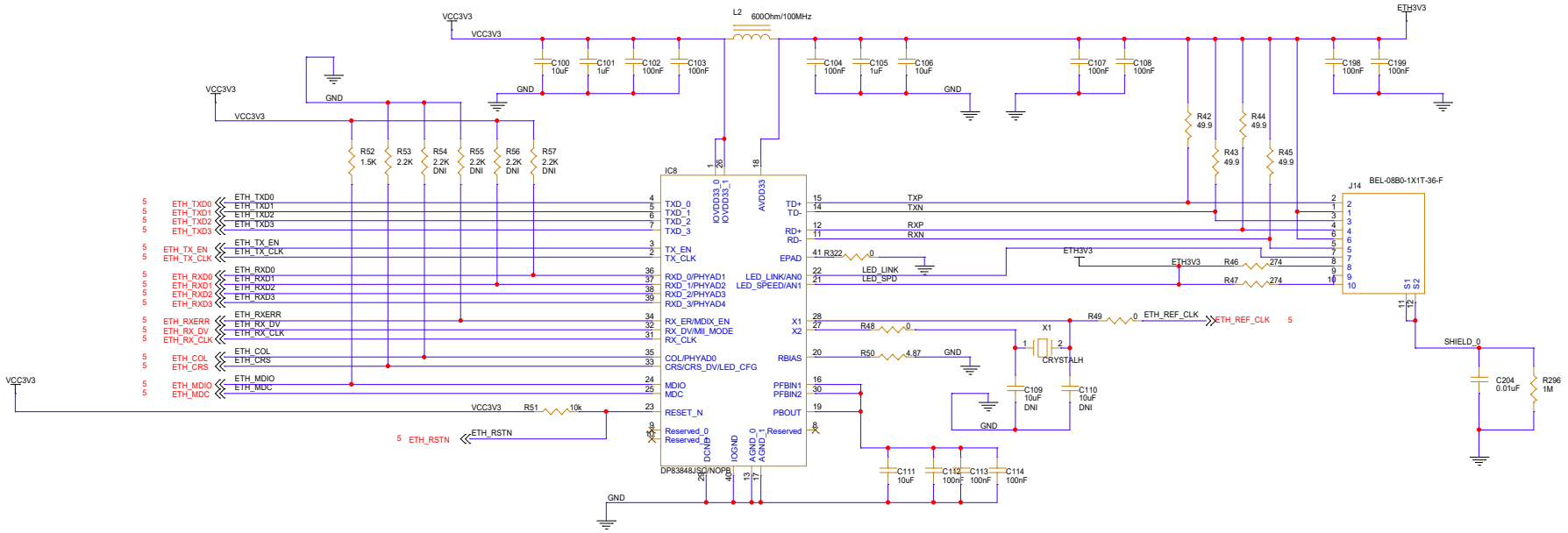

Title	ETHERNET	
Size C	Document Number Arty A7	Rev 1
Date: Saturday, May 02, 2026	Sheet 6 of 14	

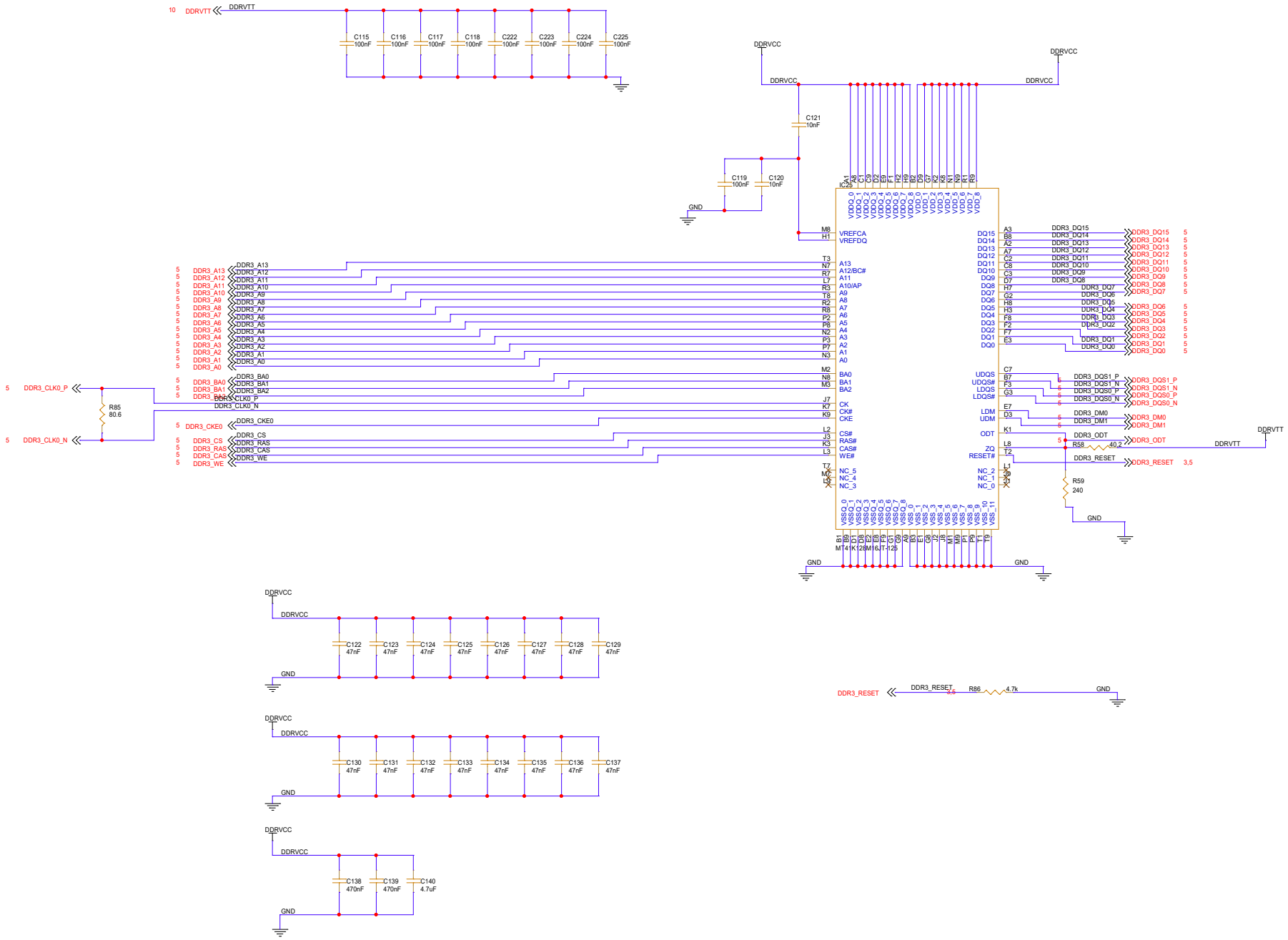

Title	DDR3	
Size C	Document Number Arty A7	Rev 1
Date: Wednesday, April 29, 2026	Sheet 7 of 14	

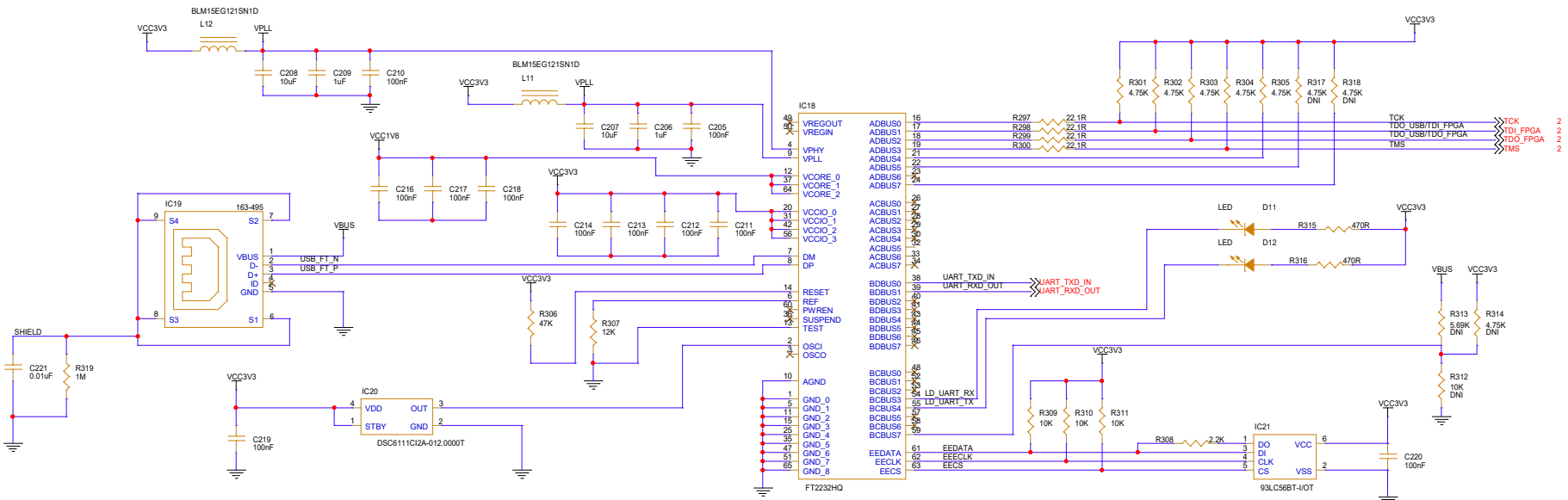

Title	USB PROG/UART	
Size C	Document Number Arty A7	Rev 1
Date: Friday, April 24, 2026	Sheet 8 of 14	

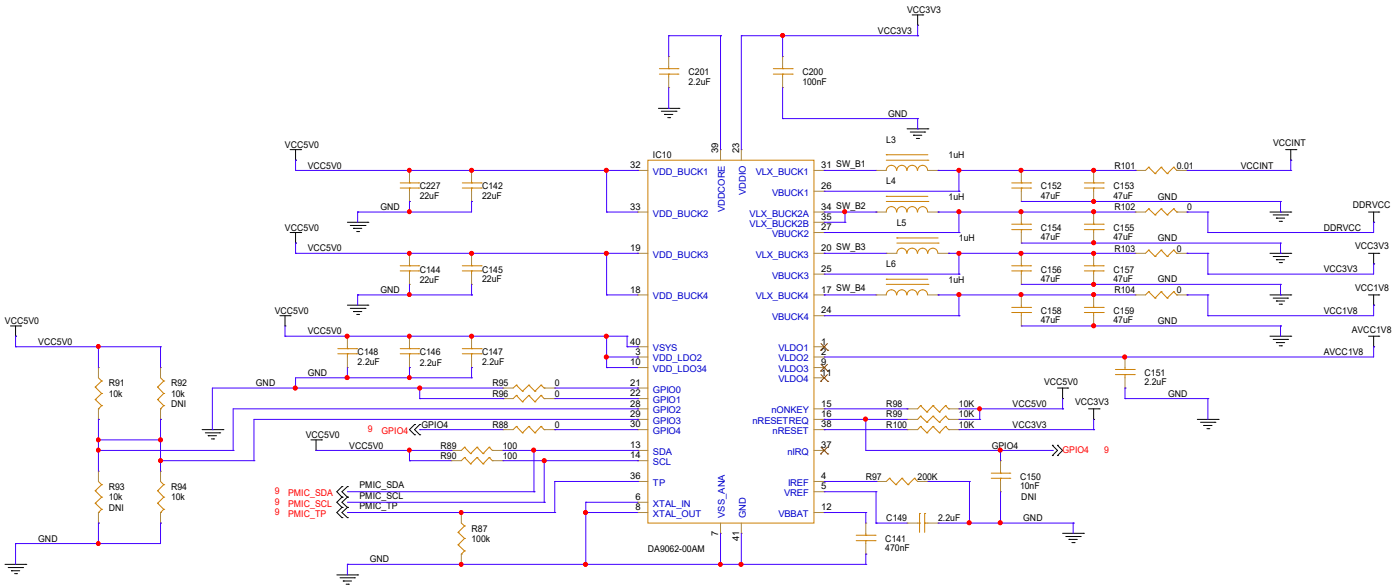

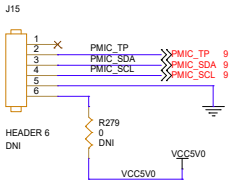

Title	POWER REGULATION		
Size C	Document Number Arty A7		Rev 1
Date: Saturday, April 25, 2026		Sheet 9 of 14	

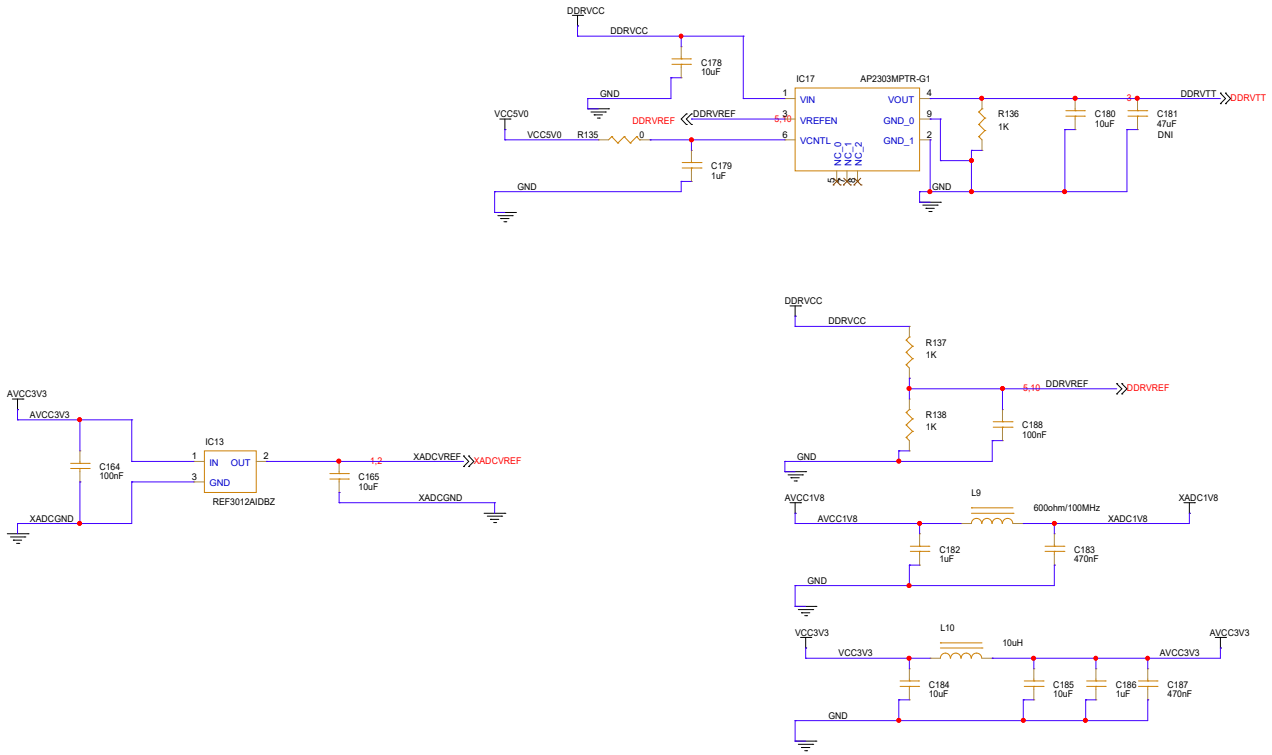

Title	POWER REGULATION V2	
Size C	Document Number Arty A7	Rev 1
Date: Monday, May 11, 2026	Sheet 10 of 14	

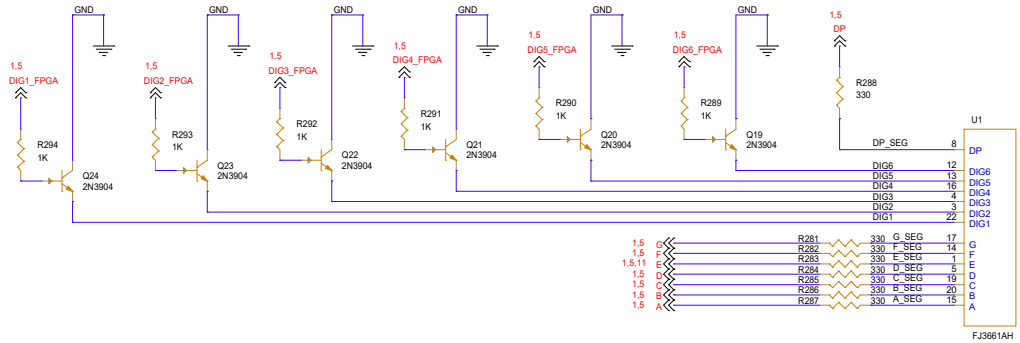

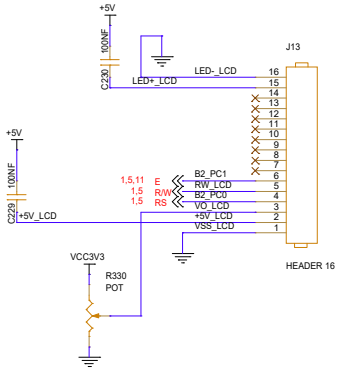

+5V

Title	LCD + 7 SEGMENTS	
Size C	Document Number Arty A7	Rev 1
Date: Monday, May 11, 2026	Sheet 11 of 14	

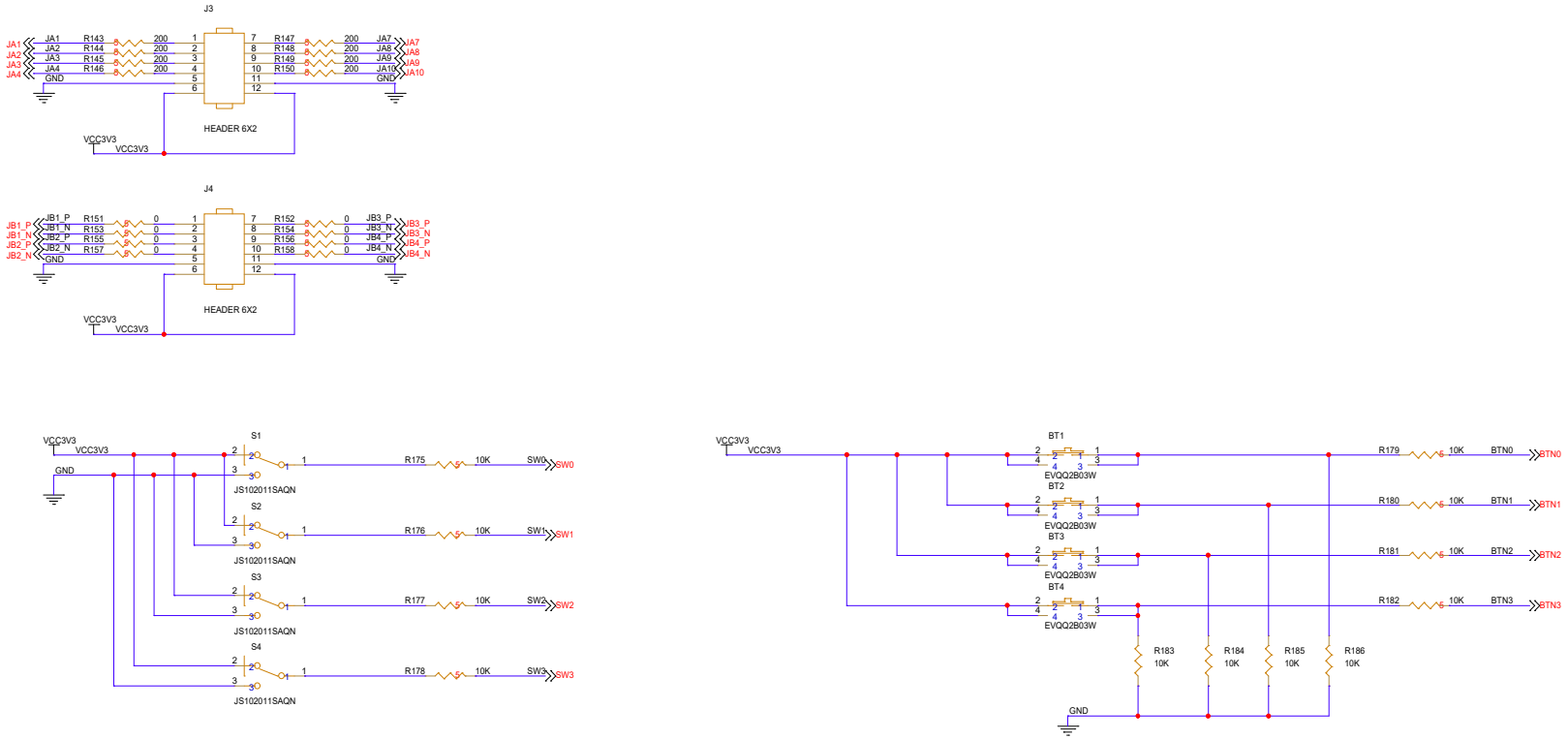

Title	PMOD, BTN, SWTs		
Size C	Document Number Arty A7		Rev 1
Date: Saturday, April 25, 2026		Sheet 12 of 14	

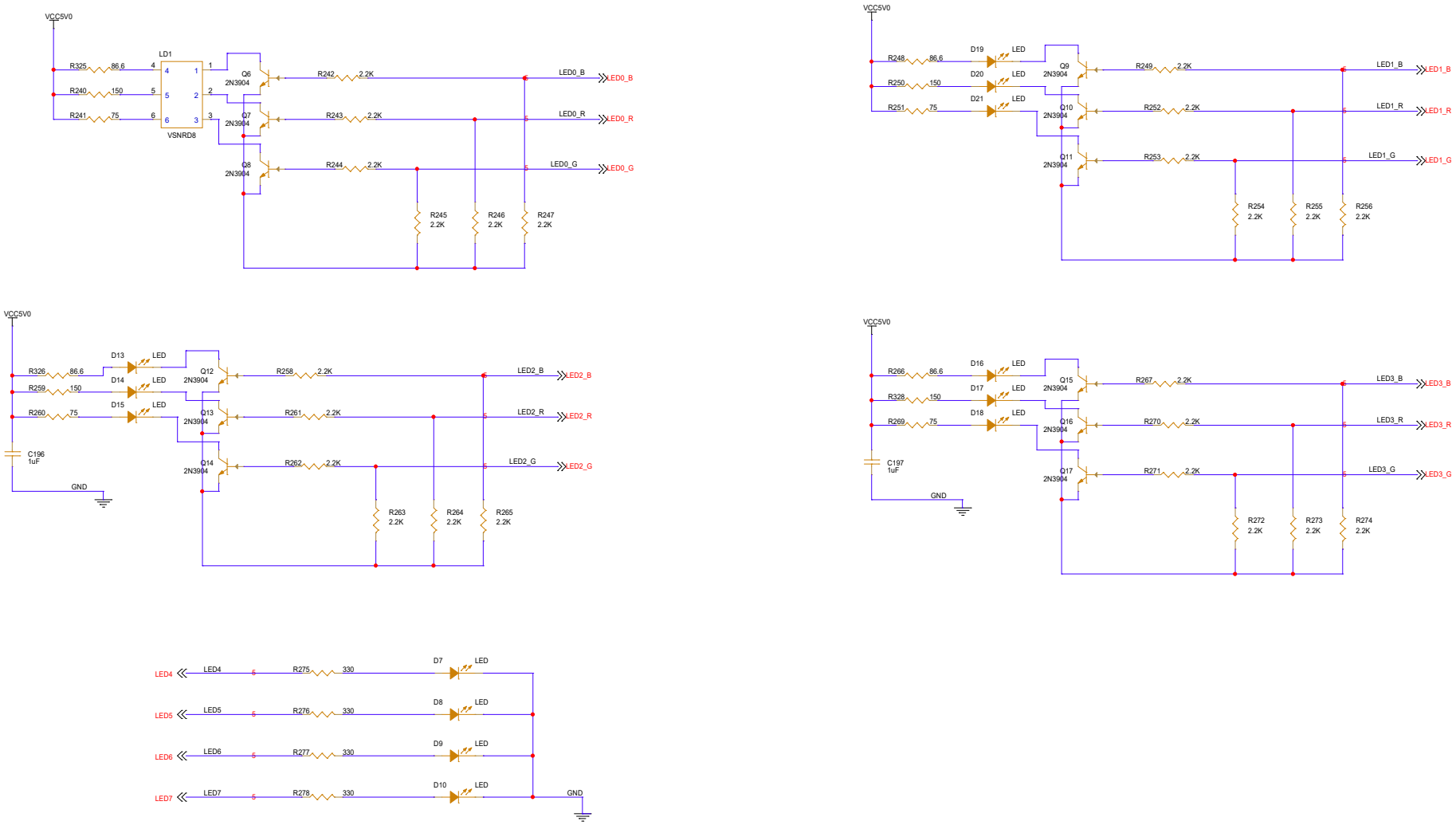

Title	LEDs	
Size C	Document Number Arty A7	Rev 1
Date: Sunday, May 03, 2026	Sheet 13 of 14	

headers, senales de CK y CK diferenciales

Se quitaron ya que no era necesarias para este proyecto

Title	CHipKIT IO	
Size C	Document Number Arty A7	Rev 1
Date: Monday, May 11, 2026	Sheet 14 of 14	